OWNER'S MANUAL

PENTAIR

STA-RITE®

ecoselect™

For the Installation, Operation and Service of the

enviroMAX 1500

Variable Speed Pool Pump

Should the installer or owner be unfamiliar with the correct installation or operation of this type of equipment you should contact the distributor/manufacturer for the correct advice before proceeding with the installation or operation of this product. The pump operator or owner must be provided with this owner's manual.

Eco Select®

The Eco Select® brand identifies our most eco-friendly products

As the global leader in pool and spa equipment, we've made a strong commitment to develop and offer the most environmentally responsible products available.

When you see the Eco Select® brand on one of our products, you'll know it is our "greenest" and most efficient product in that equipment category.

These products do the best job of saving energy, conserving water, reducing noise, or otherwise contributing to a more environmentally responsible equipment system. In every case, a product that earns the Eco Select brand is clearly our "greenest" and most efficient choice.

Table of Contents

	Page
Features and Benefits	3
Technical Information	
Model Data	4
Hydraulic Performance	5
Dimensions	5
Installation	
Pump positioning	6
Piping	6
Pool Outlets	6
Electrical	7
Equipotential Bonding	7
Operation	
Priming the Pump	9
Control Panel Overview	10
Setting Clock	11
Using Default Schedule	11
Custom Schedules	12
Operating the Pump While Running	14
Quick Clean	15
Keypad Lockout	16
Factory Reset	17
External Controls	18
Troubleshooting	
Troubleshooting Guide	23
Motor Flash Codes	25
Servicing	26
Spare Parts	28

*enviro*MAX
Features & Benefits

The Sta-rite EnviroMAX is the ideal pump for new or existing pools. Utilising advanced hydraulic design and the latest technology in permanent magnet, variable speed motors, the Sta-rite EnviroMAX has the perfect combination of efficiency and performance. The Sta-rite EnviroMAX delivers energy savings and the power when you need it. You will also have the peace of mind that you are doing your bit for the environment and reducing your carbon foot print

- Variable speed pump, with 4 programmable speeds, allows you to effortlessly select the most efficient setting to meet you filtration, cleaning and water feature needs.
- Radial flux, brushless permanent magnet motor delivers high efficiency and low noise levels.
- Fault protected motor prevents damage by automatically shutting down the motor in the event of a locked rotor, under voltage, over voltage or over current condition and will automatically reduce the speed during an over temperature condition.
- Precision-fit internal components and superior hydraulic design deliver effortless performance, energy savings and extended pump life.
- A specially designed sound-dampening pump casing and base make pump operation incredibly quiet.
- Constructed of our durable, thermoplastic, composite resin, so you can be sure it will stand up to the harshest conditions.
- A heavy-duty construction and a motor rated for continuous operation make the enviroMAX a tough, long-lasting performer.
- The high-capacity trap holds a large amount of debris, so you clean less often.
- The Cam and Ramp™ lid is easy to remove and locks in place with a quarter turn, making inspection and cleaning a breeze.
- Quick-disconnect plumbing unions.
- Automation Connectivity - Connect control cable to com port and control pump seemlessly with a Pentair IntelliCenter or EasyTouch pool automation system.

*enviro*MAX
Technical Information

Model Data

RPM:	Low 1400RPM Med 2200RPM High 3000RPM Override: 3150RPM
Electrical Rating:	230-240V 50Hz single phase
Rated Current:	Low: 1.2A (max) Med: 3.4A (max) High: 8A (max) Override: 9.6A
Motor Output Power (P_1):	Low: 235W (max) Med: 750W (max) High: 1840W (max) Override: 2100W
Motor Input Power (P_2):	Low: 188W (max) Med: 600W (max) High: 1470W (max) Override: 1700W
IP Rating:	IPX6
Inlet (Suction):	ABS Barrel Union to suit 50mm PVC pressure pipe to AS/NZS 1477
Outlet (Discharge):	ABS Barrel Union to suit 50mm PVC pressure pipe to AS/NZS 1477
Max Total Head:	21m
Max Working Pressure:	260 kPa
Water Temperature Range:	5°C – 40°C
Maximum Ambient temperature:	55°C
Recommended pH Range:	7.2 - 7.8 (Guide Only)
Sound Power Level (Lwa):	Low: 69dB Med: 63dB High: 57dB
Motor:	Axial flux, permanent magnet, DC
Protection:	Mains over voltage, mains under voltage, over temperature, under temperature, locked rotor, over current, phase disconnect.
Supply cord:	10A, H07RNF, 2m.

Hydraulic Performance

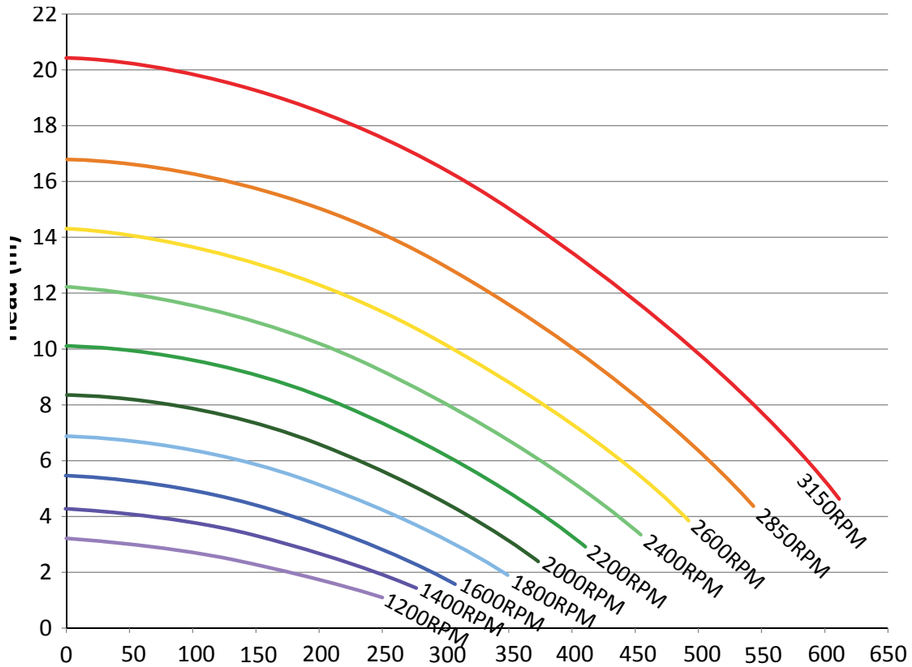

EnviroMAX 1500 Performance Chart

Dimensions

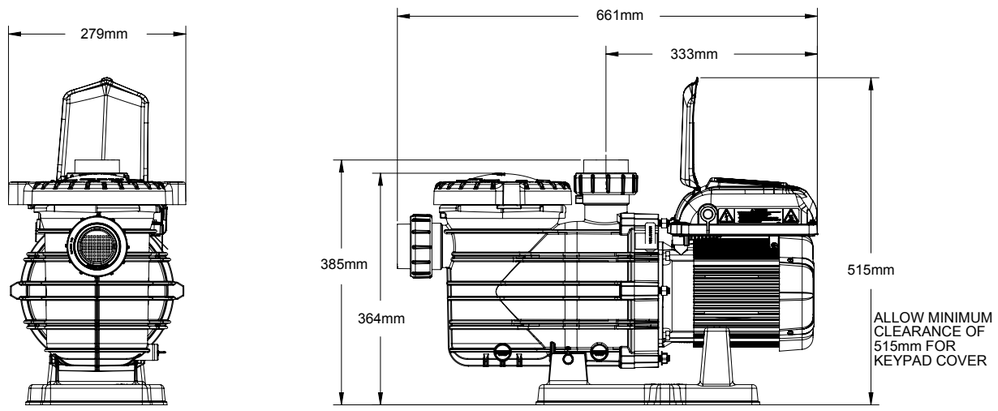

The pump must be installed and serviced by a suitably qualified person in order to avoid hazard. Incorrectly installed or tested equipment may fail, causing severe injury or property damage.

These instructions are a guide only. Should you the installer or owner of the product be unfamiliar with the correct installation or operation of this product you should contact a suitably qualified person for advice.

Do not connect system to high pressure or mains water system.

This pump is not intended for use by persons (including children) with reduced physical, sensory or mental capabilities, or lack of experience and knowledge, unless they have been given supervision or instruction concerning use of the appliance by a person responsible for their safety.

Children should be supervised to ensure that they do not play with the pump.

The EnviroMAX is electrically connected. Ensure that it is isolated from electrical supply during installation and any subsequent service work.

1. Plan the position of the pump

For best performance, allow pump suction inlet height to be as far below water level as possible and allow the use of short, direct suction pipe with minimum bends (to reduce friction losses).

a. Have enough ventilation to keep ambient temperature below the motor's rated ambient temperature whenever the pump is running. If installed in an enclosure/pump house, the enclosure must have adequate ventilation (200sq.cm min, inlet & outlet) and air circulation. Allow 200mm to keep rear of motor clear.
b. Have adequate floor drainage to prevent flooding and be protected from excess moisture.
c. Be solid, level, rigid and vibration free.
d. To reduce vibration and pipe stress, bolt pump to mount. Fixing holes accept 12mm fasteners.
e. Be within 2m of a power outlet for electrical connection (refer to AS/NZS 3000 for rules regarding connection of electrical equipment in pool zones).
f. Allow adequate access for servicing pump and piping.

2. Piping

For best performance, allow pump suction inlet height to be as far below water level as possible and allow the use of short, direct suction pipe with minimum bends (to reduce friction losses).

a. Use only Australian Standard PVC pressure pipe. For best performance use at least 50mm diameter pipe for all connections to the pump. Never use a suction pipe smaller than pump suction connections (50mm) and use larger pipe for long suction distances.
b. To avoid stress on the pump, support both suction and discharge pipes independently. Place these supports as close to the pump as possible.
c. To avoid a strain left by a gap at the last connection, start all piping at the pump and run pipe away from the pump.

3. Pool Outlets

a. The pump suction system must provide protection against hazard of suction entrapment or hair entrapment/entanglement. The pool outlet piping must be in accordance with the latest AS1926.3 standard
b. Suction outlet covers and skimmers must have been tested and found to comply with the latest AS1926.3 standard or ASME/ANSI specification for Suction Fittings.

4. Electrical

Do not use extension leads as they are unsafe in and around the Pool Zone.

Hazardous voltage. Can shock, burn or cause death.

To avoid dangerous or fatal electrical shock, turn OFF power to pump and remove plug from outlet before working on electrical connections.

a. Electrical installation shall be in accordance with the national wiring rules (AS/NZS 3000) taking into account its ratings (Class I, IPX6). The pump is supplied with a standard Australian 10 amp plug and 2 metres of cord. Select the correct Pool Zone for installation.
b. An RCD with maximum rated residual current of 30mA is required for the power supply to the pump. Additionally, if a suitable socket outlet is not available a weatherproof socket must be installed by an electrician in a suitable location. RCD tripping indicates an electrical problem. If RCD trips and will not reset have a qualified electrician inspect and repair electrical system.
c. Incorrect voltage can cause fire or seriously damage pump and voids warranty.
d. Voltage at pump must not be more than 6% above or 10% below motor nameplate rated voltage or pump may overheat, causing overload tripping and reduced component life. If voltage is less than 90% or more than 106% of rated voltage when pump is running at full load, consult the power company.

5. Equipotential bonding

The EnviroMax 1500 pump is double insulated to water circtuit. Check with local code requirements whether equipotential bonding is required.

If equipotential bonding is required, connect all metal parts of the swimming pool or spa structure and to all electrical equipment, metal conduit, and metal piping in accordance with the wiring rules. Run a wire from the equipotential bonding terminal on the pump (bottom, left motor bolt with serrated washer) to the pool bonding structure.

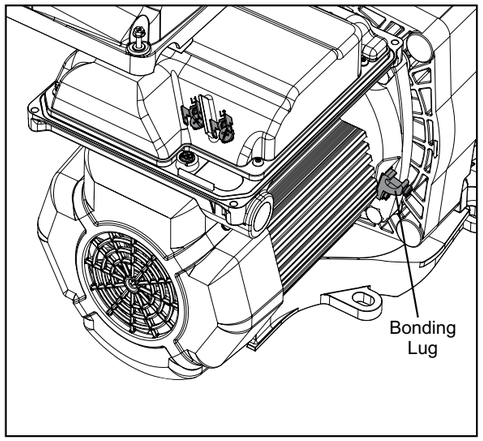

Figure 1: The bonding lug should be used to bond the motor frame to the equipment pad.

NEVER run pump dry. Running pump dry may damage seals, causing leakage and flooding. Fill pump with water before starting motor.

Freezing conditions will damage the unit, as water expands as it freezes. Ensure that the EnviroMAX 1500 is located so that it is not prone to freezing, or ensure that the product is disconnected and dried of water during cold conditions.

Trapped air in system can cause explosion. Ensure all air is out of the system before operating or testing equipment

Fire and burn hazard. Modern motors run at high temperatures. To reduce the risk of fire, do not allow leaves, debris, or foreign matter to collect around the pump motor. To avoid burns when handling the motor, let it cool for at least 20 minutes before trying to work on it.

Small children using pool must ALWAYS have close adult supervision

Pump suction is hazardous and can trap and drown or disembowel bathers. Do not use or operate pump, pool/spas if a suction outlet cover is missing, broken, or loose. Follow the guidelines below for a pump installation which minimises risk to users of pool and spas.

NEVER tighten or loosen trap lid while pump is operating.

Priming the pump

It is not necessary to lubricate the oring. The original equipment O-ring contains a permanent internal lubricant

a. Before removing trap lid, SWITCH OFF POWER SUPPLY to pump.
b. CLOSE SHUT-OFF VALVES on suction and discharge pipes, if present.
c. Remove the trap lid (turn anti-clockwise)
d. Fill trap tank with water.
e. Check the lid o-ring and sealing surface, ensure there is no dust or debris on either, and replace the lid (turn clockwise to tighten by hand only - no wrenches!).
f. Open the shut-off valves on the suction and discharge pipes, if present.
g. Release all air from filter, pump and piping system (refer filter owner's manual). In a flooded suction system (water source higher than pump), pump will prime itself when suction and discharge valves are opened and air is released.
h. Switch on power to the pump to start.
i. Pump should start to prime now. Priming time will depend on vertical height of suction lift and horizontal length of suction piping but is generally between 30 seconds to 3 minutes under normal installation conditions.
j. The EnviroMAX 1500 will start slowly but ramp up to 2850RPM for the first 3 minutes to assist priming. It will then switch to the selected speed (Step1).

* Should the pump not prime, ensure that all valves are open, lint trap is clear of debris and suctions and suction pipe end is submersed in water, and that there are no leaks in suction pipe. See troubleshooting guide.

Control Panel Overview

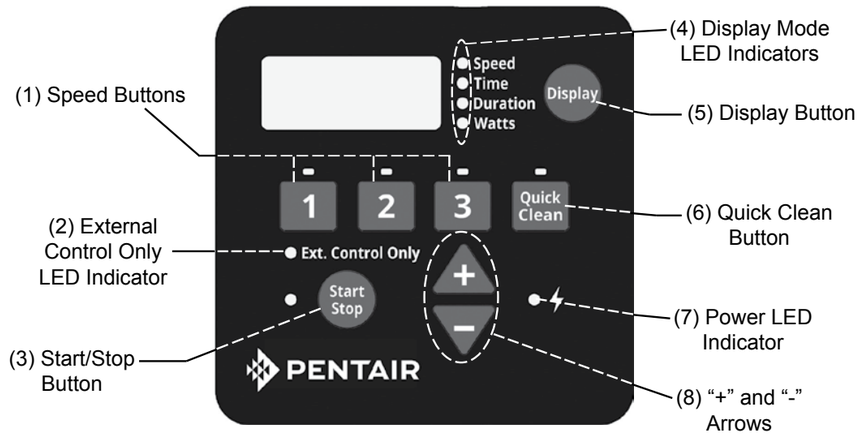

⚠ CAUTION

If power is connected to the EnviroMAX 1500 Variable Speed Pump motor, pressing any of the following buttons referred to in this section could result in the motor starting. Failure to recognize this could result in personal injury or damage to equipment.

Keypad Navigation

1. **Speed Buttons** - Used to select the run speed desired. The LED above the Speed Buttons will illuminate when that speed is selected or is currently running. A flashing LED indicates that an External Control is active on that speeds channel.
2. **External Control Only LED Indicator** - Indicates that the pump is operating in External Control Only mode. When LED is illuminated the schedule is disabled and the only input is from the low voltage external controls.
3. **Start/Stop Button** - Used to Start and Stop the pump. When the pump is stopped and the LED is not illuminated, the pump is unable to run from any type of input.
4. **Display Mode LED Indicators** - An illuminated LED indicates the information being displayed on the screen at any specific point. A flashing LED indicates that the parameter is currently being edited.
5. **Display Button** - Used to toggle between the different available display modes. This button is also used to set the 24-hour clock and screen resolution.
6. **Quick Clean Button** - Used to run a selected speed and duration programmed for Quick Clean. When the LED is illuminated the Quick Clean schedule is active.
7. **Power LED Indicator** - An illuminated LED indicates that there is live power being supplied to the pump.
8. "**+**" and "**-**" Arrows - Used to make on screen adjustments to the pump settings. The "**+**" arrow increases the value of a given setting, while "**-**" decreases the value of a given setting. Pressing and holding down either arrow button will increase or decrease the incremental changes faster.

Activating and Deactivating the Time Clock

The EnviroMax 1500 is equipped with a digital clock that can be either activated or deactivated.

Clock ON: The pump will start based on the start time that is set for speed 1. It will run for the duration of speed 1 and then switch to speed 2 automatically. It will then run for the duration of speed 2 and then switch to speed 3 automatically. It will then run for the duration of speed 3 and then switch off automatically.

Clock OFF: The pump will start once powered on. It will run for the duration of speed 1 and then switch to speed 2 automatically. It will then run for the duration of speed 2 and then switch to speed 3 automatically. It will then run for the duration of speed 3 and then switch off automatically.

Pump will resume start/stop state on powering up. If pump does not start, press the start/stop button.

Changing Clock Status:
1. With the pump stopped, hold down the display key for 3 seconds.
2. The display will flash "Cloc" and then flash "ON" or "OFF".
3. Use the up or down buttons to change clock mode between ON and OFF.
4. Press the display key to proceed to set the time (for ON mode) or screen contrast setting.
5. Press the display key again to return to the home screen.
6. Press the start/stop button to resume pump operation.

Setting the Clock

When the pump is first plugged in, the clock has not been set. Any daily schedule set by the user will be based on this clock setting, so it will be necessary to set the clock first.

To Set the Clock:
1. Press and hold the **Display** button for 3 seconds.
2. Use the "**+**" and "**-**" arrows to choose between a 12 or 24 hour time format.
3. Press **Display** to advance in the Clock Setup menu
4. Use the "**+**" and "**-**" arrows to change the time to the correct time of day. In the 12 hour time format AM/PM will display in the bottom right corner.
5. Press **Display** to advance.
6. Use the "**+**" and "**-**" arrows to adjust the screen backlight brightness.
7. Press Display to exit the Clock Setup menu. The clock is now set.

During a power outage, the drive will retain the clock setting in memory for as long as 24 hours. If the power is out longer than 24 hours the clock will have to be set again. If the drive has lost the user set time, the clock will continuously blink until the time is reset. Once the time is reset the clock will stop blinking.

Note: When power is returned to the pump after a prolonged outage (24+ hours) the clock will automatically set itself to the Speed 1 start time, blink and advance. The pump will also run the associated schedule from that start time.

Using the Default Schedule

The default schedule is designed to provide enough daily turnover to service a typical pool. See **Table 1** for default schedule.

	Duration (Hours)	Speed (RPM)
SPEED 1	2	3000
SPEED 2	10	1400
SPEED 3	2	2200

Table 1: Default Schedule.

SPEED 1 is set to begin at 8:00am and run at 3000 RPM for a duration of 2 hours. When SPEED 1 is complete the pump immediately begins running the default SPEED 2. SPEED 2 is factory default to 1400 RPM and will last for 10 hours. When SPEED 2 has completed its run the pump will run SPEED 3 at 2200 RPM for a duration of two hours.

After 14 hours of run time and completing its run of SPEED 3, the pump will enter a stationary/paused state for the next 10 hours. The pump will restart at 8:00am the next morning and cycle through the default schedule again. The pump will continue to run in this in this manner until a custom schedule is programmed into the drive by the user.

Note: The **Start/Stop** button must be pressed, and the LED lit, for the pump to run.
If the time clock is turned off. The pump will start at speed 1 whenever the pump is powered up.

Custom Schedules

To customize the run schedule for your EnviroMAX 1500 Variable Speed Pump, the pump must be stopped. Be sure that the Start/Stop button LED is not illuminated.

Programming a Custom Schedule:

Note: When programming, the LED light next to the parameter ("Speed", "Time" and "Duration") you are setting will blink.

1. Stop the pump if it is running by pressing the **Start/Stop** button.

2. Press the "**1**" button. The LED above the selected SPEED will begin to blink and the "Speed" parameter LED will blink while editing. See **Figure 3**.

Figure 3: Setting Speed

3. Use the "**+**" and "**-**" arrows to adjust the speed in RPM for SPEED 1.

Note: Speed is adjusted up or down by increments of 10 RPM.

4 Press the "**1**" button again and the display will change to SPEED 1 start time. The "Time" parameter LED will begin to blink. See **Figure 4.**

Figure 4: Setting Start Time

5. Use the "**+**" and "**-**" arrows to adjust the daily start time for SPEED 1. If the time clock is turned off, the start time is not selectable on speed 1 and the menu will go straight to duration setting.

6. Press the "**1**" button again and the display will change to SPEED 1 duration. The "Duration" parameter LED will begin to blink. See **Figure 5**.

Figure 5: Setting Duration

Custom Schedules

7. Use the "**+**" and "**-**" arrows to adjust the duration for SPEED 1 in hours and minutes.
Note: The duration parameter is adjusted in 15 minute increments.

8. Pressing the "**1**" button will continue to cycle through these parameters, but the changes are immediately saved as they are adjusted.

9. Press the "**2**" button. The LED above SPEED 2 will begin to flash and the corresponding parameter LED will flash while editing.

10. Use the "**+**" and "**-**" arrows to adjust the speed in RPM for SPEED 2.

11. Press the "**2**" button again and the display will change to SPEED 2 duration.
Note: SPEEDs 2 and 3 do not have a start time, as they begin their duration immediately after the previous SPEED finishes.

12. Use the "**+**" and "**-**" arrows to adjust the duration for SPEED 2 in hours and minutes.

13. Repeat steps 9-12 to program SPEED 3 and QUICK CLEAN.

Note: Remember that the duration allowed for SPEED 3 will be limited to the remaining time in a 24 hour day. Any time in the 24 hour day not programmed into SPEEDs 1-3, the pump will remain in a stationary state. [SPEED 1 + SPEED 2 + SPEED 3 < 24 Hours]

14. Press the **Start/Stop** button and ensure the LED is lit. The pump is now on and will run the custom user-programmed schedule.

Note: If the pump has been stopped via the Start/ Stop button, the pump will not run until the pump is turned back on by the Start/Stop button. If the Start/Stop LED is illuminated then the pump is on and will run the programmed schedule.

Note: If a user wants to have a period of time during the day when the pump is not running, any of the SPEEDs can be programmed to 0 RPM. This will cause the pump to remain stationary/paused throughout the duration of that SPEED.

Speed Priorities (Non-External Control)
For schedule duration settings, SPEEDs are prioritized as follows: SPEED 1 -> SPEED 2 -> SPEED 3. SPEED 1 is the highest priority, while SPEED 3 is the lowest.

The drive will not allow a user to program a schedule of more than 24 hours. When the 24th hour of duration is programmed it will take time from the lower priority speeds in order to add them to the SPEED currently being adjusted.

Example:
Starting Schedule (Before Adjustment)
SPEED 1 duration = 20 hours
SPEED 2 duration = 2 hours
SPEED 3 duration = 2 hours

If the user reprograms SPEED 1 to run for 23 hours, SPEED 2 (lower priority speed) will automatically adjust to a 1 hour duration and SPEED 3 (lowest priority speed) will adjust to a 0 hour duration.

End Schedule (After Adjustment)
SPEED 1 duration = 23 hours
SPEED 2 duration = 1 hour
SPEED 3 duration = 0 hours

Operating the Pump White Running

⚠CAUTION
If power is connected to the pump motor, pressing any of the following buttons referred to in this section could result in the motor starting. Failure to recognize this could result in personal injury or damage to equipment.

Pressing the **Display** button will cycle through the current parameters.
• **Speed** — current run speed
• **Time** — current time of day
• **Duration** — amount of time remaining at the current run speed
• **Watts** — amount of watts currently being consumed
Pressing any of the Speed Buttons ("**1**", "**2**", "**3**", "**Quick Clean**") while the pump is running will act as temporary override. It will run the speed and duration that is programmed for that button. Once completed it will default back to the appropriate point in the programmed schedule.

Note: If you adjust the speeds of the schedule while the pump is running, it will run the adjusted speed for the rest of the current duration, but will not save the adjustments. **Exception: Speed and Duration adjustments to QUICK CLEAN will always be immediately saved.**

Quick Clean

If running Quick Clean, pressing the "**+**" or "**-**" arrows will change the speed accordingly. Pressing the Quick Clean button again within 10 seconds of pressing the "**+**" or "**-**" arrows will allow you to adjust the duration of Quick Clean via the "**+**" and "**-**" arrows. These changes will be saved immediately and are the new defaults for Quick clean. Pressing the Quick Clean button again will cycle through the two Quick Clean settings. The pump will exit out of editing mode if no additional buttons are pressed within 10 seconds.
If Quick Clean is running and you wish to stop the Quick Clean prior to the duration being completed you can press and hold the Quick Clean button for 3 seconds and the pump will return to the appropriate point in the programmed schedule.

Priming

⚠CAUTION
This pump is shipped with Priming mode ENABLED. Unless the Priming settings are changed in the menu, **be aware that the pump will speed up to the priming speed when the pump is powered on for the first time, and the start/stop button is pressed.**
Before turning the pump ON, be sure the following conditions are met:
1. Open filter air relief valve.
2. Open valves.
3. Pool return is completely open and clear of any blockages.
4. Water in the pump basket.
5. Stand clear of the filter or other pressurized vessels.

⚠CAUTION
DO NOT run the pump dry. If the pump is run dry, the mechanical seal will be damaged and the pump will start leaking. If this occurs, the damaged seal must be replaced. ALWAYS maintain proper water level in your pool (half way up skimmer opening). If the water level falls below the skimmer opening, the pump will draw air through the skimmer, losing the prime and causing the pump to run dry, resulting in a damaged seal. Continued operation in this manner could cause a loss of pressure, resulting in damage to the pump case, impeller and seal and may cause property and personal injury.

Priming will automatically run when the EnviroMAX 1500 Variable Speed Pump is started from a stopped state, except when running in Quick Clean mode. Priming will run at 3450 RPM by default, and will last for 5 minutes. The drive's screen will display and cycle through the following things "PrI - Priming Speed, PrI -- Remaining Time".

Once priming has begun, the speed can be adjusted between 3450 and 1700 RPM using the "**+**" and "**-**" arrows. If it is adjusted below 1700 RPM, Priming mode will be disabled and the pump will immediately begin to run the scheduled speed.

When priming is disabled and the pump is started from a stopped state, the screen will display, "PrI - OFF" for 10 seconds while running the scheduled speed (See **Figure 6**). This allows the user time to enable priming mode by pressing the "**+**" arrow. If the user chooses to re-enable priming mode, the pump will then transition from the scheduled speed to 1700 RPM. The user can increase the priming speed from 1700 RPM by pressing the "**+**" arrow. The 5 minute priming countdown timer starts when priming is first engaged.

The installer should set the priming speed to be sufficient for priming the pump from a fresh install, but not so fast that there is a substantial waste of energy during the 5 minute priming window. The time the pump needs to achieve prime can change based on local environmental conditions such as water temperature, atmospheric pressure, and your pool's water level. All of these things should be taken into consideration when setting the priming speed, however in most cases the pump will not need to run at 3450 RPM to successfully prime itself.

Please test and verify chosen priming speeds more than once, letting the water drain from the system in between each test.

Note: The pump strainer basket should always remain full to the bottom of the inlet in order to prevent air from entering the system.

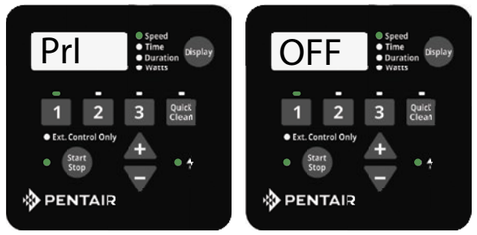

Figure 6: Priming Deactivation

Quick Clean

The EnviroMAX 1500 Variable Speed Pump is equipped with a Quick Clean feature, which can be engaged to temporarily run at higher or lower speeds ranging between 300 to 3450 RPM. Once the Quick Clean duration has elapsed, the pump will automatically return to the programmed schedule.

Programming Quick Clean:

1. Stop the pump if it is running by pressing the **Start/Stop** button.

2. Press the **Quick Clean** button. The LED above the **Quick Clean** button and the "Speed" parameter LED will flash while editing. See **Figure 7**.

Figure 7: Setting Speed for Quick Clean

3. Use the "**+**" and "**-**" arrows to adjust the speed in RPM for Quick Clean.

4. Press the **Quick Clean** button again and the display will change to Quick Clean duration. The "Duration" parameter LED will flash while editing. See **Figure 8**.

Note: The Quick Clean feature does not have a start time.

Figure 8: Setting Duration for Quick Clean

5. Use the "**+**" and "**-**" arrows to adjust the duration in hours and minutes for Quick Clean.

6. Press the **Start/Stop** button and ensure the LED is illuminated. The pump is now on and will run the speed and duration set for Quick Clean.

Note: When the Quick Clean duration ends, the pump resumes the 24 hour schedule at the point where it normally would be running at that time. The Quick Clean duration will not affect the start or stop times of the 24 hour schedule. For example, if Quick Clean runs during a period overlapping with a later part of SPEED 1 and an early part of SPEED 2, the start time of SPEED 3 is not affected.

Note: Pressing/Holding **Quick Clean** key for more than three (3) seconds will cancel Quick Clean mode.

Note: During the Quick Clean mode, the pump will not start with the priming sequence.

Note: It is recommended that you do not set the Quick Clean duration to 0 HRS. Setting the Quick Clean duration to 0 HRS will not allow you to change the duration setting while the motor is running. The motor will have to be stopped in order to change the Quick Clean settings if the duration is set to 0 HRS.

Keypad Lockout

⚠CAUTION

Key lockout will not prevent the motor from being stopped by pressing the Start/Stop button. It will then be unable to be restarted until the keypad has been unlocked. If the motor is operating in Keypad Lockout mode, and being controlled through external controls, it can only run when the Start/Stop LED is illuminated.

The EnviroMAX 1500 Variable Speed Pump user interface has a Keypad Lockout feature to prevent unwanted changes to the settings. When locked, the keypad will only accept input from pressing the **Display** button to cycle the displayed information on the screen and input to stop the motor from a press of **Start/Stop** button.

The keypad can be locked by pressing and holding the"**1**" button and the **Quick Clean** button at the same time for at least three seconds. "Loc On" will be displayed if successful.

To unlock the keypad press and hold the "**1**" button and the **Quick Clean** button at the same time for at least three seconds. "Loc OFF" will be displayed if successful.

Note: While operating in Keypad Lockout mode the motor can still be stopped by pressing the **Start/Stop** button. However, the motor can not be started again until the user unlocks the keypad.

Factory Reset

The drive can be reset to factory settings if necessary. A Factory Reset will wipe out all of the saved user settings that have been programmed, except for the time of day. Be sure that it is necessary before performing a Factory Reset, as the results are immediate.

To perform a Factory Reset:

1. Stop the pump if necessary by pressing the **Start/Stop** button.
2. Record all of the custom schedule settings using Table 3. You can find these setting by pressing the "**1**", "**2**", "**3**", and "**Quick Clean**" buttons and cycling through all the screens. Also write down the Priming Speed.
3. Press and hold the "**1**", "**2**", "**3**", and "**Quick Clean**" buttons for 3 seconds.
4. The screen will display "FACt rSt" if factory reset is successful. See **Figure 9**.
5. Be sure to reprogram the schedule and priming speed after the factory reset. The pump must be turned back on with the Start/Stop button before it will run again. The pump will run the programmed schedule upon initial start-up.

Note: Factory Reset can not be performed from a Keypad Lockout state.

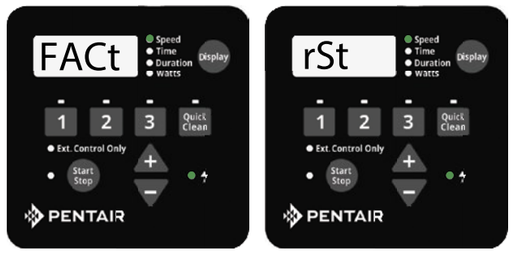

Figure 9: Drive Factory Reset

	Speed (RPM)	Duration (Hours)	Start Time (Time Clock)
SPEED 1			
SPEED 2			
SPEED 3			
QUICK CLEAN			
Priming Speed			

Table 3: User Programmed Schedules

Control with Pentair Pool Automation System

The user can run the EnviroMAX1500 Variable Speed Pump with a Pentair pool automation system (EastyTouch, IntelliTouch), allowing all four Speeds to be programmed and controlled remotely. The pump has a sealed connector that can be used with Pentair External Control Wiring Kit (**Pentair P/N 356324Z**) to run the Speeds using 2-wire serial communication (RS-485). When the Pentair automation sends a signal, the pump will run at the designated speed.

Connecting to External Controls via RS-485

The following instructions only apply to EnviroMax 1500 pumps manufactured from November 2023. For all other pumps, refer to External Control via Digital Inputs

These pumps can be controlled from certain Pentair control systems, via an RS-485 signal, when paired with the RS-485 Automation Wiring Kit (P/N 356324Z).

Note: If the pump is manually stopped using the Start/Stop button, the pump will not run until the Start/Stop button is pressed. If the Start/Stop LED is illuminated, the pump is active and can be controlled externally.

Only the GREEN and YELLOW conductors will be used to wire the pump for external control via RS-485. See Figure 10 below.

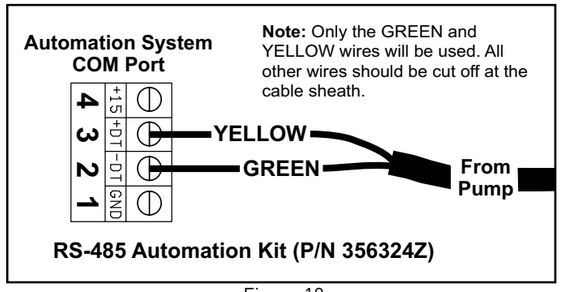

Figure 10

Control System Pump Settings

Pump Type: Variable Speed (VS) Control systems with older firmware may require the pump be designated "IntelliFlo VS". This pump will not process control system commands if designated a Variable Flow (VF) or Variable Speed/ Flow (VSF) pump.
Pump Address: 1 or 2 Ensure the assigned pump address matches the pump address in the control system. Refer Setting the Clock and Pump Address, page 19.
Refer to the control system manual for more information on connecting and programming your pump.

TO WIRE FOR EXTERNAL CONTROL USING RS-485:

1. Route the communication cable from the Pump Com Port (Figure 11) to the control system wiring compartment.
2. Ensure the cable reaches all necessary terminals and cut to the necessary length.
3. Strip the cable's outer sheathing by 3/4" (19 mm).
4. Strip the GREEN and YELLOW conductors 1/2" (13 mm).
5. Cut back the unused conductors.
6. Connect YELLOW and GREEN conductors to the control system as shown in Figure 10.
7. Activate the pump's internal clock and program the clock to the correct time. Refer to Setting the Clock and Pump Address on page 19.
8. Program SPEED 1 to a speed of 0 RPM and duration of 24 hours. Refer to Programming Custom Schedules on page 12.

Connecting to External Controls via RS-485 (Continued)

9. Disable priming at the pump. Priming duration and speeds will be controlled by the control system. Note: If priming is not disabled at the pump, priming will be continue to be controlled by the pump. Refer to Priming on page 9.
10. Plug the communication cable into the Pump Com Port (Figure 11).

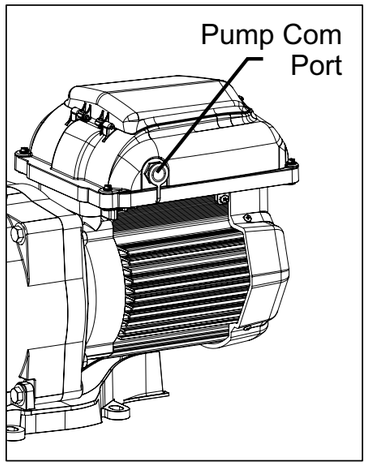

Figure 11

Setting the Pump Address

1. With the pump powered, but stopped.
2. Press and hold Display button for 3 seconds.
3. Press Display to advance menu until "Addr" is displayed.
4. If controlling pump via RS-485: Use "+" and "-" to assign one of two pump addresses, then press display to exit the menu.

Control with External Control and Digital Inputs

The user can run the EnviroMAX1500 Variable Speed Pump with automation external controls, allowing all four programmed Speeds to be controlled remotely. The pump has a sealed connector that can be used with Pentair External Control Wiring Kit (**Pentair P/N 356324Z**) to run the Speeds using digital input signals. When there is an external low voltage signal present on the Speed Digital Input line, the pump will run the speed programmed for that Digital Input. The supplied +5V signal is the recommended input used for external control and Speed Digital Inputs.

Connecting to External Controls

Using the Supplied Low Voltage Signal for Digital Control

The EnviroMAX 1500 provides a low voltage output signal that can be used to trigger its own Digital Inputs. This signal will need to be switched via the External Control system to engage the speed that it is connected to as in **Figure 12**. This could be an automation relay or switch in another piece of equipment. This feature could be useful for ensuring that the pump is running a certain program when a specific speed is needed to perform a task. The wire included with the External Control Wiring Kit (**Pentair P/N 356324Z**) will need to be cut to length for the installation. Do not leave excess wire around the installation, and the wire should be supported by something rigid if conduit is not used. At one end of the cable is a custom molded, watertight connection that plugs into the panel connection on the side of the drive. The opposite end has 8 wires that are defined by **Table 4** below. When using the +5V signal supplied by the drive, the speeds should be wired as shown in **Figure 12**. When there is a low voltage signal present on the Speed Digital Input line the pump will run the speed that is programmed for the speed that is being triggered. The +5V signal supplied via the (red) wire is the suggested input for the Speed Digital Inputs. See **Figure 12**.

Note: Any relay can be associated to any Digital Input. **Figure 12** shows one of many potential wiring options available to the installer, allowing you to install External Controls in the way that best suits your needs.

Note: This +5V Signal (red wire) is output from the drive only, and should never be wired to another power supply!

When a Speed Digital Input is triggered, the LED above the **Speed** button will begin to blink and the display will toggle between the display parameter and "EC" indicating an External Control is running. The pump will run this speed as long as the Digital Input trigger is present. This will override the schedule or any user inputs for Speed selections via the keypad. The **Display** button is still functional along with the **Start/Stop** button. Once theDigital Input trigger is removed from all of the Speed Digital Input wires, the pump will resume the programmed schedule.

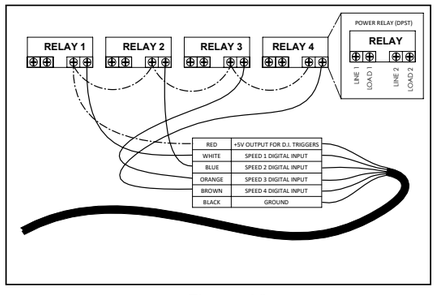

Figure 12

Signal Description	Signal Range	Wiring Kit 356324Z
+5V Output for Digital Inputs	0-20mA	Red
RS-485 A	-7V to +12V	Yellow
RS-485 B	-7V to +12V	Green
SPEED 1 Digital Input	0, 5-30V AC/DC	White
SPEED 2 Digital Input	0, 5-30V AC/DC	Blue
SPEED 3 Digital Input	0, 5-30V AC/DC	Orange
QUICK CLEAN Digital Input	0, 5-30V AC/DC	Brown
Common Ground	0V	Black

Table 4

When using an externally supplied low voltage signal as the Digital Input trigger, the wire should be connected as shown in **Figure 13**. The low voltage input needs to be within the range of 5-30V AC or DC. In this case the red +5V supply from the motor control will not be used.

Note: This +5V signal (red wire) is output from the drive only and should never be wired to a voltage supply!

The external low voltage signal can be regulated by switches or relays to activate the desired Digital Input. If more than one Digital Input is active at one time then they will be resolved by priority.

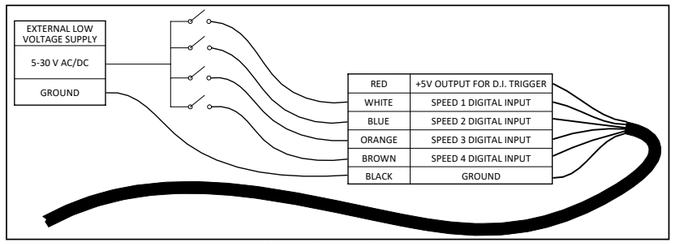

Figure 13: Low Voltage Power Supply Wiring Diagram.

Note: If the pump has been stopped via the **Start/Stop** button, the pump will not run until the pump is turned back on by pressing the **Start/Stop** button. If the **Start/Stop** LED is illuminated, that indicates the pump is on and will run via Digital Inputs.

Note: If multiple low voltage triggers are present it will be resolved by this priority: Quick Clean, Speed 3, Speed 2, and then Speed 1.

External Control Only Mode

External Control Only mode will only allow the pump to run from external controls/inputs. When this mode is active the programmed pump schedule is deactivated, and user speed requests from the keypad will not be accepted. If the pump is stopped a user can still program the speeds for all four Speed buttons.

To activate External Control Only mode:

1. Stop the pump by pressing the **Start/Stop** button.
2. Activate External Control Only mode by pressing and holding the **Start/Stop** button for 3 seconds.
3. If successful the LED next to Ext. Control Only will illuminate. See **Figure 14**.
4. The **Start/Stop** button must be pressed again to allow the pump to run.

To deactivate External Control Only mode:

1. Stop the pump by pressing the **Start/Stop** button.
2. Deactivate External Control Only mode by pressing & holding the **Start/Stop** button for 3 seconds.
3. If successful the LED next to Ext. Control Only will turn off. See **Figure 14**.
4. The **Start/Stop** button must be pressed again to allow the pump to run.

Figure 14: Activating External Control Only

To avoid dangerous or fatal electrical shock hazard, turn OFF power to pump and remove plug from power outlet before working on pump.

Do not operate pump with trap basket missing or damaged.

► It is essential for the longevity of the pump that regular service and maintenance be carried out. The EnviroMAX 1500 incorporates high velocity moving parts and is pumping water containing harsh pool chemicals. Some parts which will wear during the normal operation and expected life of the pump.

FREQUENCY	
Once per week	Once per month
CHECK	
✓ Inspect trap basket, and empty of any leaves and other debris. Leaves and other debris that collects in basket will choke off water flow through the pump and reduce efficiency and performance. See below instructions on cleaning the trap.	✓ Check the pump to ensure no water is leaking from inlet and outlet joints, whilst pump is operating. If leaks are noticed, clean and grease the o-rings or replace if necessary.
✓ Clean area around pump and ensure there are no leaves or debris which could become a fire hazard or choke the motor fan.	✓ Check that there are no leaks from under the pump. If there are, this could be a sign of a leaking mechanical seal. Call a Pentair Service Agent immediately, to prevent damage to the motor.
	✓ Check pump and motor for insects and pest infestations and ensure that motor fins are clean of dust and dirt. Clean if necessary.

Follow instructions below to clean trap:

1. Switch off power to pump, close valves in suction and discharge, and release all pressure from system before proceeding.
2. Remove trap cover (turn counter clockwise). If necessary, tap handles gently with a rubber mallet.
3. Remove strainer basket and clean. Ensure all holes in basket are clear, flush basket with water and replace in trap with large opening at pipe connection port (between ribs provided). If basket is replaced backwards, the cover will not fit on trap body. To clean transparent cover, use water and neutral soap only. Do not use solvents.
4. Clean and inspect lid o-ring; reinstall on trap. Clean O-ring groove on trap body and replace cover. To help keep cover from sticking, tighten hand tight only.
5. Prime pump (refer priming instructions).

Troubleshooting guide

SYMPTOM	CAUSE	REMEDY
Low water pressure, low flow from pump.	**Suction leaks / lost prime.**	► Pump must be primed; make sure that the pump casing and strainer are full of water. Refer priming instructions. ► Make sure there are no leaks in suction piping and ensure all o-rings are present and clean. ► Make sure suctions pipe inlet is well below the water level to prevent pump from sucking air. ► Suction lift of 3 to 6 metres will reduce performance. Suction lift of more than 6 metres will prevent pumping and cause pump to lose prime. In either instance, move the pump closer (vertically) to water source. Ensure that the suction pipe diameter is large enough.
	Low speed setting.	► Check speed setting. Refer to speed selection section of this manual. Reset to default if necessary.
	Clogged pipe / strainer / impeller / filter system.	► Ensure trap is not clogged with debris; clean basket and/or filter. ► Make sure that the impeller is not clogged. This should be checked by qualified personnel only. ► Pump may be trying to push too high a column of water. If so, a higher pressure pump is required.

Troubleshooting guide (continued)

SYMPTOM	CAUSE	REMEDY
No water coming from pump (pump is working).	**Air ingress to system.**	► Prime the pump. Check that there are no air leaks in the suction piping or fittings. Ensure the strainer lid is airtight and fitted securely. Ensure all o-rings are present.
Pump does not work.	**Motor fault.**	► Refer to motor fault codes.
	No power at outlet.	► Use another electrical appliance that is known to work to check power outlet.
	Blown fuse / Circuit breaker.	► Check and call electrician if necessary.
Pump running too slow.	**Low speed setting.**	► Check speed setting. Refer to speed selection section of this manual. Reset to default if necessary.
	Motor high temperature limit exceeded.	► Ensure motor fins are clean and fan is intact and free from blockages. Ensure adequate ventilation and reduce ambient temperature.
Pump running at incorrect speed.	**Duration incorrectly set.**	► Change duration of desired speed/ step to make sure it's not "0".
	Pump in priming mode.	► Wait for priming cycle to complete. (3 minutes)
Water leaking from between the casing and motor.	**Casing bolts are not tightened sufficiently; worn mechanical seal requires replacing.**	► Switch off the power to the pump. Tighten the casing bolts or replace the mechanical seal as required.

Should problems persist, contact your nearest Pentair Water Service Agent.

Troubleshooting guide

Errors and Alarms

If an alarm is triggered the drive's LCD screen will display the fault code text and the EnviroMAX 1500 Variable Speed Pump will stop running. Disconnect power to the pump and wait until the keypad LEDs have all turned off. At this point, reconnect power to the pump. If the error has not cleared then proper troubleshooting will be required. Use the error description table below to begin troubleshooting.

Fault Code	Description
21	Communication link between HMI and motor control has been lost
1A	Power Module over current detected
17	Phase Current Offset out of range
16	Phase Current Imbalance detected
0F	Absolute AC under voltage detected
02	Absolute Phase current limit exceeded
08	Absolute Diode Bridge temperature limit exceeded
04	Absolute Power Module temperature limit exceeded
06	Absolute Power Factor Correction (PFC) temperature limit exceeded
09	DC bus over voltage detected
0A	DC bus under voltage detected
19	Motor start failure
0b	AC Voltage maximum exceeded

21 – Communication Link between the HMI and Motor control has been lost: Check the jacketed wire on the back side of the keypad inside the drive top cover. Ensure that the 5 pin connector is properly plugged into the socket and that there is no damage to the cable.

Also, check that the impeller is free. Insert an allen key into rear of moto

1A - Power Module Over Current Detected: If this error displays multiple times, then there may be a problem with the pump's rotating assembly. Please disassemble the pump and investigate to see if there is a problem with the impeller or mechanical seal. See page 26 "Pump Disassembly" for instructions for disassembling the pump.

02 - Power Module Over Current Detected: If this error displays multiple times, then there may be a problem with the pump's rotating assembly. Please disassemble the pump and investigate to see if there is a problem with the impeller or mechanical seal. See page 26 "Pump Disassembly" for instructions for disassembling the pump.

0F – Absolute AC Under Voltage Detected: This indicates that the supply voltage has dropped below the operating range of 99v. This could be caused by normal voltage variation and will clear itself. Otherwise therecould be excess voltage sag caused by improper installation or improper supply voltage.

19 – Motor Start Failure: Could indicate a locked rotor. Verify the fan at the rear of the motor is free of debris. Attempt to break up impeller blockages by rotating the motor shaft through the fan cover using a hex-key. If this does not work the pump may need to be disassembled (see Pump Disassembly on page 26).

0b – AC Voltage Maximum Exceeded: Indicates that the supply voltage is exceeding the operating range of 251v.

17, 16, 08, 04, 06, 09, 0A – Internal Errors: These errors can occur based on operating conditions and the UL 60730 required self-diagnostic safety software. If they do not clear after multiple restart attempts the drive should undergo a hard power cycle. Disconnect main power by turning off the breaker long enough for the keypad LEDs to turn off. After power is reconnected if one of these errors continues to reappear, the drive may need service.

Servicing

To avoid dangerous or fatal electrical shock hazard, turn OFF power to pump and remove plug from power outlet before working on pump.

Motor Care

Protect from heat

1. Shade the motor from the sun.
2. Any enclosure must be well ventilated to prevent overheating.
3. Provide ample cross ventilation.

Protect against dirt

1. Protect from any foreign matter.
2. Do not store (or spill) chemicals on or near the motor.
3. Avoid sweeping or stirring up dust near the motor while it is operating.
4. If the motor has been damaged by dirt it may void the motor warranty.
5. Clean the lid, O-Ring, and sealing surface of the strainer pot regularly.

Protect against moisture

1. Protect from splashing or sprayed water.
2. Protect from extreme weather.
3. If motor internals have become wet - let them dry before operating. Do not allow the pump to operate if it has been flooded.
4. If the motor has been damaged by water it may void the motor warranty.

Pump Disassembly

TOOLS REQUIRED:

- 3/8" socket or open-end spanner
- Phillips head screwdriver
- 1/4" hex key
- Flat blade screwdriver

TO DISASSEMBLE THE PUMP:

1. Press Start/Stop to stop the pump and disconnect all power to the pump at the circuit breaker.
2. Disconnect any digital inputs or communication cables from the pump (if connected).
3. Close all valves in suction and discharge pipes and relieve all pressure from the system.
4. Remove both drain plugs from the bottom of the strainer pot.
5. Using a 3/8" spanner, remove the four (4) bolts and washers securing the strainer pot to the motor assembly.
6. GENTLY separate the pump halves. You can use a large flat blade screwdriver to lever the halves apart.
7. Using a phillips head screwdriver, remove the seven (7) screws securing the diffuser to the seal plate.
8. Hold the motor shaft in place at the rear of the motor, with a 1/4" hex key.
9. Continue to hold the motor shaft in place and unthread the impeller counter-clockwise.
10. Using a 3/8" spanner, remove the four (4) bolts securing the seal plate to the motor.
11. If replacing the shaft seal, continue to Shaft Seal Replacement on page 27. Otherwise, continue to Pump Reassembly when necessary.

Servicing

Shaft Seal Replacement

1. Place seal plate face down on a flat surface and tap out white ceramic seal (see Figure 15).

Figure 15

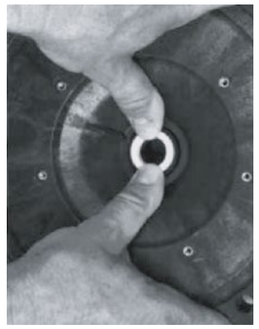

Figure 16

2. Remove the slinger from motor shaft and inspect damage or abrasion.
3. Clean the seal plate's seal cavity and the motor shaft. IMPORTANT: The ceramic seal of the pump's shaft seal must be clean and free of dirt, grease and dust before installing.
4. Wet the outer edge of the ceramic seal with a small amount of liquid detergent. Firmly and squarely press it into the seal plate cavity with your thumbs (see Figure 16).
5. If ceramic seal does not seat properly into the seal plate cavity, remove it and place the seal face up on a flat surface. Reclean the seal plate cavity and attempt to reseat the seal. If ceramic seal still will not seat correctly in the seal plate, place a cardboard washer over the ceramic seal and use a piece of 3/4" standard pipe to press the seal into place. Note: Be sure not to scratch or mar the surface of the seal. If seal is damaged it will leak.
6. Replace the slinger on end of the motor shaft so that the impeller sleeve will push it into position
7. Remount the seal slate onto the motor using the four (4) motor to seal plate screws. Torque the screws to 60-80 inch-lbs. (69-92 kg/cm).
8. Apply a small amount of liquid detergent to the inside diameter of the rotating seal member.
9. Slide the rotating seal member, polished carbon face outwards, over the impeller sleeve until rubber drive ring hits the back of the impeller. Note: Be sure not to scratch or mar the polished seal face. The seal will leak if damaged.

Pump Reassembly

1. Screw the impeller onto the motor shaft clockwise. The impeller will correctly seat the rotating seal member on the seal plate.
2. Mount the diffuser onto the seal plate with the seven (7) screws and washers. Torque screws to 10-14 inch/ lbs. (11.2-16.1 kg/cm).
3. Assemble the motor and seal plate to the pump body with the seal plate to pump body hardware. Torque nuts to 120-130 in-lbs. (138-150 kg/cm).
4. Reinstall the drain plug into the bottom of the pump body.
5. Open all gate valves in the suction and discharge lines.
6. Reconnect power to the pump at the power point.
7. Prime the pump according to Priming the Pump, on page 9.

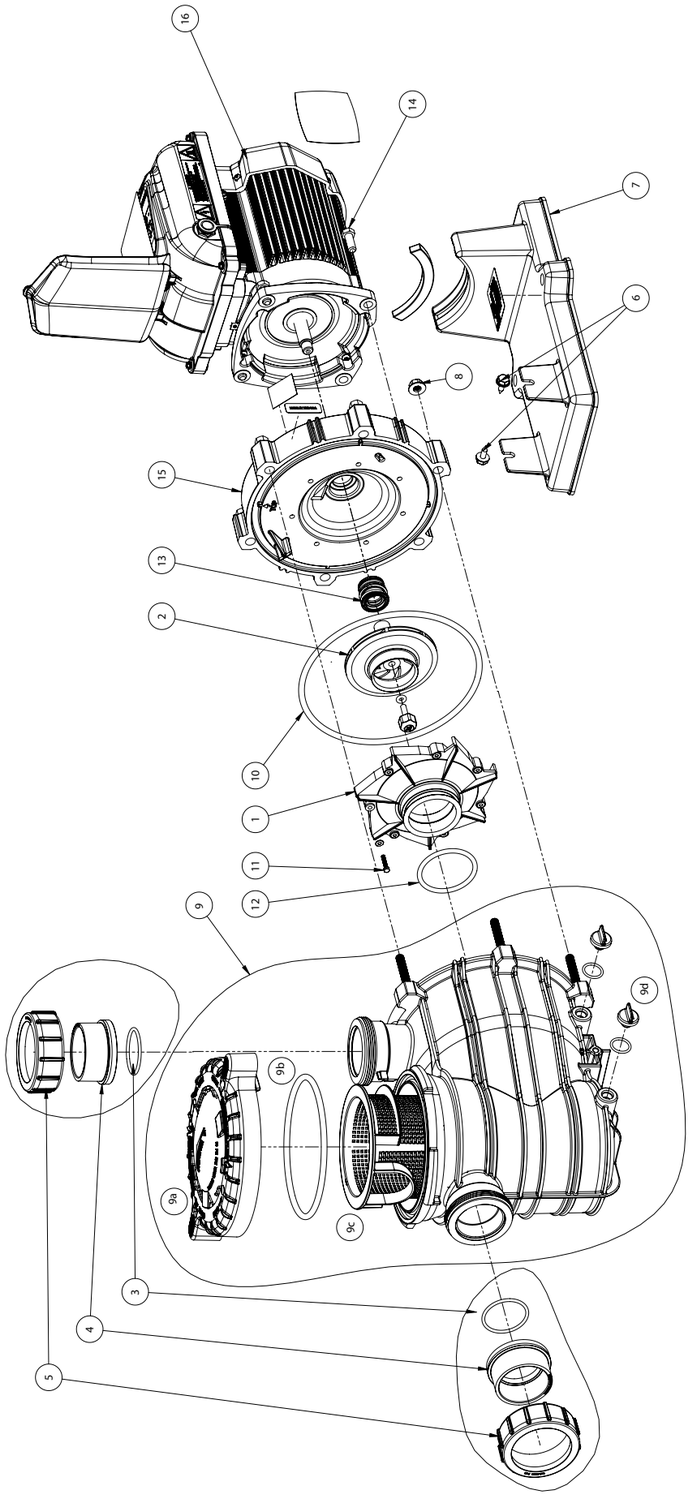

No.	Description	Qty	Part Number
1	DIFFUSER	1	See Diffuser & O-ring kit
	DIFFUSER & O-RING KIT (INCLUDES ITEM 1,11&12x7)	1	801423
2	IMPELLER	1	801427
3	O-RING- COLLAR UNION	2	See Barrel Union Kit
4	COLLAR UNION 2" SLIP	2	See Barrel Union Kit
5	COLLAR UNION 2"	2	See Barrel Union Kit
	BARREL UNION KIT (INCLUDES 3, 4, & 5) x2		801245
6	SCREW 5/16-14" x 1"	2	See Pump Base Kit
7	BASE	1	See Pump Base Kit
	BASE KIT (INCLUDES 6, 7 & MOTOR PAD)	1	801281
8	NUT 3/8" SS	6	See Pump Fasteners Kit
	PUMP FASTENERS KIT	1	801280
9	PUMP CASING ASSEMBLY		C176-71P
9a	LID	1	17307-0111
9b	O-RING LID	1	35505-1440
9c	BASKET	1	C8-58P
9d	DRAIN PLUG & O-RING	2	U178-920P
10	O-RING PUMP CASING	1	U9-374
11	SCREW 8/32" X 22mm SS PHILLIPS HEAD	7	See Diffuser & O-ring kit
12	O-RING DIFFUSER	1	U9-373
13	MECHANICAL SEAL	1	801428
	MECHANICAL SEAL (25 PACK)		800900
14	SCREW 3/8"UNC x 1" HEX SS	4	See Motor Fasteners Kit
	MOTOR FASTENERS KIT (INCLUDES ITEM 3x4)	1	801279
15	SEAL PLATE	1	C3-184P
16	MOTOR + DRIVE	1	800179
	MOTOR PAD	1	See Pump Base Kit
	Not Shown		
	DRIVE	1	800047
	FAN	1	800051
	COWL	1	800050
	KEYPAD COVER	1	800049
	TOP COVER	1	800046
	MOTOR ONLY	1	800048

EnviroMAX 1500

Variable Speed Pool Pump

IMPORTANT
Please attach your sales invoice/docket here as proof of purchase should warranty service be required.

Purchased from:.....

Purchase date: ..... Serial No.: ..... Model No.: .....

Head Office
Pentair AU/NZ: 1-21 Monash Drive
Dandenong South,
VIC 3175

National customer service: Phone: 1300 137 344
Fax: 1800 006 688
National dealer locator: Phone: 1800 664 266
Email: au.sales@pentair.com
Web: www.pentairpool.com.au

© Information contained here-in remains the property of Pentair Australia Pty Ltd. Any reproduction, display, publication, modification or distribution is strictly prohibited without the prior written permission of Pentair Australia Pty Ltd.

Disclaimer:
Every endeavour has been made to publish the correct details in this document. No responsibility will be taken for errors, omissions or changes in product descriptions, specifications. Pentair Australia reserves the right to change specifications.

L300293 - 1123