BWT
BEST WATER TECHNOLOGY

ES ECHO

Robotic pool cleaner

EN OPERATING INSTRUCTIONS / **2**

DE BEDIENUNGSANLEITUNG FÜR DEN AUTOMATISCHEN BODENSAUGER / **8**

FR MISE EN MARCHE DE VOTRE ROBOT NETTOYEUR DE PISCINE / **14**

IT ISTRUZIONI PER IL CORRETTO FUNZIONAMENTO DEL PULITORE PER PISCINA /**20**

ES INSTRUCCIONES DE USO / **26**

PT INSTRUÇÕES DE FUNCIONAMENTO / **32**

For your safety

1. Do not perform any cleaning or maintenance other than the routine cleaning and maintenance described in this manual. This product must be serviced by a licensed and qualified pool equipment repair professional in accordance with local laws.
2. Use only original and authorized power adapter and cable for charging.
3. Do not use the product if the power cord is damaged. Before charging, make sure the connector and socket are dry and clean.
4. Make sure the electrical outlet is protected by a Ground Fault Circuit Interrupter (GFI) or a Ground Fault Interrupter (GFCI).
5. Do not attempt to charge the ES ECHO while the robot is running. Ensure the power is turned off.
6. Do not dive into the pool while the robot is operating in the pool.
7. Improper installation and/or operation may void the warranty.
8. To reduce the risk of injury, do not allow children to operate or ride on the robot.
9. When the robot is charging, it should be kept in a cool place to avoid damage to the internal electrical components due to overheating.
10. This appliance can be used by children aged from 8 years and above and by persons with reduced physical, sensory or mental capabilities or lack of experience and knowledge if they have been given supervision or instruction concerning use of the appliance in a safe way and understand the hazards involved. Children shall not play with the appliance. Cleaning and user maintenance shall not be made by children without supervision.
11. Do not attempt to replace the battery yourself. Contact customer service if the battery needs to be replaced.

WARNING: Use only with the DZ130AWL252450V battery charger

EN

Read the manual and follow the instructions accordingly. In case of improper use, BWT is not responsible for any loss or injury.

1. This device must be installed and operated in accordance with the specifications.
2. This device must be installed to provide a separation distance of at least 20 cm from all persons and must not be installed or operating in conjunction with any other antenna or transmitter.
3. Under Industry Canada/Europe/Australia regulations, this radio transmitter may only operate using an antenna of the type and maximum (or lesser) gain approved for the transmitter by Industry Canada/ Europe/Australia.
4. Any changes or modifications not expressly approved by the party responsible for compliance could void the user's authority to operate the device.
5. When not in use, store the device in a shaded area away from direct sunlight or any heat source. (We recommend removing the device from the water after each use.)

In the box

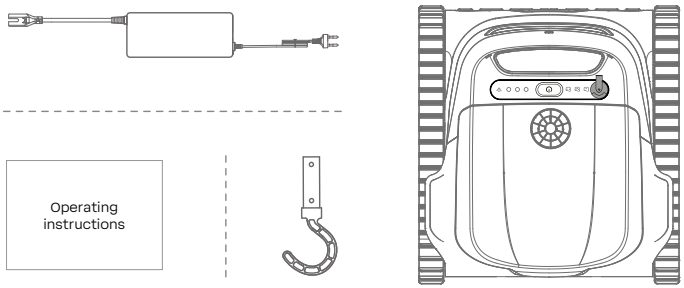

- Double filtration

Charge

1. Fully charge the robot for 5 hours before first use.
2. To ensure battery safety, keep the charging contacts dry. You can wipe them with a soft, dry cloth. Before charging, remove any water from the charging contacts.

Use

- Start cleaning
- The robot will automatically move to the edge of the pool once cleaning is complete or when the battery level is below 10%..

Automatic parking

1. Press the power button for 2 seconds to turn on the robot.
2. Short press the power button to select cleaning mode.
3. When the battery indicator flashes quickly, simply place the robot in the water, and it will start working automatically.

To remove the robot from the pool, attach a standard pole (not included) to the retrieval hook and use it to lift the robot out of the water.

IOS **Android**

1. Hold the robot upright to drain the water.
2. Open the filter cover and remove the filter from the robot.
3. Remove all dirt from the filter and rinse it with clean water using a hose. If the filter is very dirty, clean it with soapy water and a soft-bristled brush.
4. Put the filter back into the robot and close the lid properly for next use. Place the robot in a dry place and let it dry completely. Do not place the robot in direct sunlight.

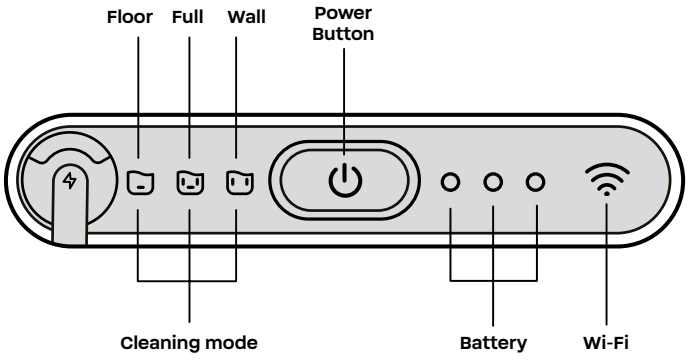

	Icon	Meaning
Press to		Clean the pool floor
		Clean the pool floor and walls
		Clean the pool walls and waterlines

EN

Charge

1. Fully charge the robot for 5 hours before first use.
2. To ensure battery safety, keep the charging contacts dry. You can wipe them with a soft, dry cloth. Before charging, remove any water from the charging contacts.

Use

Start cleaning

The robot will automatically return to the pool edge once cleaning is complete or when the battery level is below 10%.

Battery status	
● ● ●	67 ~ 100 % Battery
● ● ○	34 ~ 66 % Battery
● ○ ○	1 ~ 33 % Battery
Flashing: Charging in progress	

Automatic parking

1. Press the power button for 2 seconds to turn on the robot.
2. Press the power button for 2 seconds to turn on the robot.
3. When the battery indicator flashes quickly, simply place the robot in the water, and it will start working automatically.

To remove the robot from the pool, attach a standard pole (not included) to the retrieval hook and use it to lift the robot out of the water.

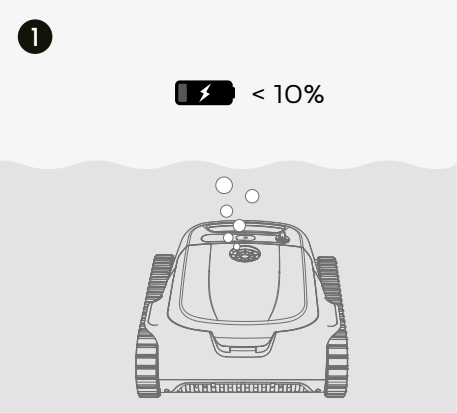

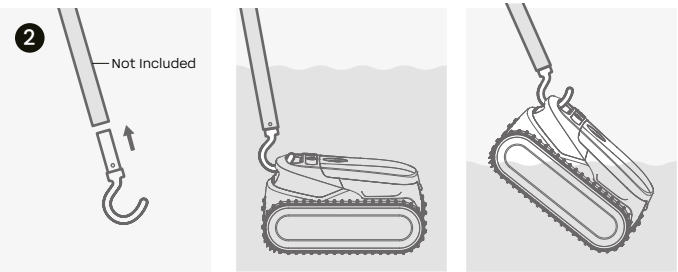

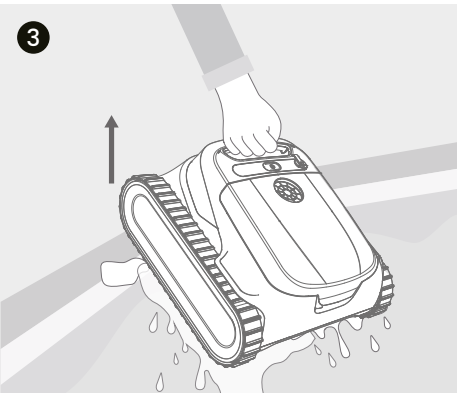

4. Hold the robot vertically to drain the water.

EN

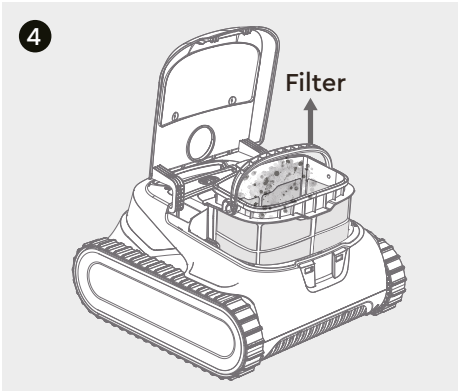

5. Open the filter cover and remove the filter from the robot.

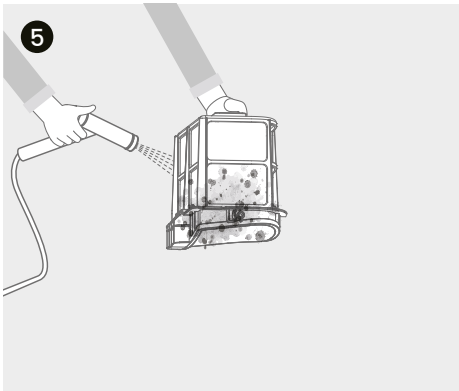

6. Remove all dirt from the filter and rinse it with clean water using a hose. If the filter is very dirty, clean it with soapy water and a soft brush.

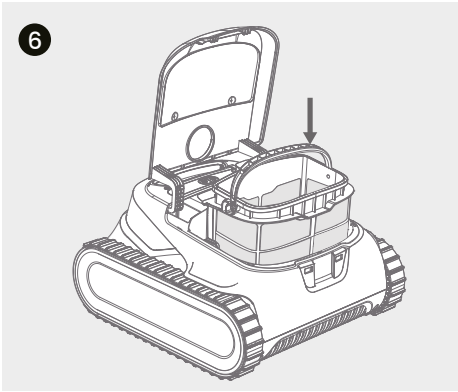

7. Reinsert the filter into the robot and close the lid properly for the next cleaning process. Place the robot in a dry place and allow it to dry completely. Do not expose the robot to direct sunlight.

Maintenance and upkeep

Filter basket (replace if necessary)

1. Turn off the robot. Open the filter cover and remove the filter basket..
2. Twist and remove the propeller cover, then use a small knife or other tool to remove the tangled hair.
3. Replace the propeller cover and twist it to secure it.

Propeller cover (clean if necessary)

Please charge the battery to at least 60~80% before long-term storage.

Recommended storage temperature: -5 ~ 35°C (23 ~ 95°F).

For optimal battery life, recharge at least every 6 months.

Long-term storage

1. Open the filter covers and remove the filters from both sides of the robot.
2. Insert the new filters.
3. Carefully close the filter covers.
4. It is recommended to clean the filter basket after each cleaning cycle.

EN

Product specifications

Product Dimensions	**430 * 400 * 230 mm**
Item Weight	**7.8 kg**
Battery Capacity	**7,800 mAh**
Maximum Power	**100W**
AC Adapter Input	**100 ~ 240V AC 50/60 Hz**
AC Adapter Output	**25.2V DC**
Storage Temperature	**-5 ~ 35 °C**
Water Depth	**0.5 ~ 4 m**
Water Temperature	**5 ~ 35°C**
pH Level	**7.0 ~7.8**
NaCl Content	**Max 4,000 ppm**
Chlorine Content	**Max 4 ppm**

FCC Statement and Statement for Canada

EN

This device complies with Part 15 of the FCC Rules. Operation is subject to the following two conditions :

1. This device may not cause harmful interference, and
2. This device must accept any interference received, including interference that may cause undesired operation.

Any modifications or changes not expressly approved by the party responsible for compliance could void the user's authority to operate this device.

This equipment has been tested and found to comply with the limits for a Class B digital device, pursuant to Part 15 of the FCC Rules. These limits are designed to provide reasonable protection against harmful interference in a residential installation.

This equipment generates, uses and can radiate radio frequency energy and, if not installed and used in accordance with the instructions, may cause harmful interference to radio communications. However, there is no guarantee that interference will not occur in a particular installation.

If this equipment does cause harmful interference to radio or television reception, which can be determined by turning the equipment off and on, the user is encouraged to try to correct the interference by one or more of the following measures:

- Reorient or relocate the receiving antenna.
- Increase the separation between the equipment and receiver.
- Connect the equipment into an outlet on a circuit different from that to which the receiver is connected.
- Consult the dealer or an experienced radio/TV technician for help.

The antenna(s) used for this transmitter must be installed so as to maintain a minimum distance of 20 cm from any person and must not be located or operated in conjunction with any other antenna or transmitter.

End users should be informed of the transmitter's operating conditions to ensure RF exposure compliance.

Battery Usage and Maintenance Information

The battery in this device is a consumable component and is subject to natural wear over time. Its capacity will gradually decrease with use. To maximize battery lifespan, please follow these guidelines:

Operating Temperatures

This device should only be operated within the specified temperature limits. Extreme temperatures, both high heat and extreme cold, can significantly impact battery performance and lifespan. While the battery is designed to function within its operational range, prolonged exposure to extreme temperatures should be avoided.

Factors Affecting Battery Capacity

Battery capacity is influenced by several factors, including:

- Temperature: High temperatures accelerate the chemical aging process of the battery.
- Charging habits: Frequent partial discharges and incomplete charges can reduce long-term capacity.
- Deep discharge: The battery should not be fully discharged, as this significantly shortens its lifespan.
- Storage conditions: Long periods of inactivity with a completely discharged battery can lead to deep discharge, rendering the battery unusable.

Charging and Storage Guidelines

- Before long-term storage, charge the battery to at least 80%.
- Store the device in a dry place with an ambient temperature between 18 and 25°C (64–77°F).
- Exposure to extreme cold or heat during storage can cause permanent battery degradation.

By following these best practices, you can preserve the battery's performance and extend its lifespan.

Functioning

Start cleaning

1. Press the power button for 2 seconds to turn on the robot.
2. Short press the power button to select the desired cleaning mode.
3. Once the mode indicator light stays on, place the robot in the pool within one minute to start operation.

Floor – Cleans the pool floor
Full – Cleans the pool floor and walls
Wall – Cleans the pool walls and waterline

EN